Refrigerated Display Cabinet Test Report

Test Laboratory Name/Address
Laboratory of FROST TECH(Guangzhou) Refrigeration Facilities CO.,LTD.
Xiaowu Industrial Zone Dongchong Town,Nansha District,Guangzhou,
Guangdong Province,P.R.China.

Manufacturing Name/Address
FROST TECH(Guangzhou) Refrigeration Facilities CO.,LTD.
Xiaowu Industrial Zone Dongchong Town,Nansha District,Guangzhou,
Guangdong Province,P.R.China.

Brand Name	FROST TECH
Product	Refrigerated display cabinet
Description	The product covered by this report is a commercial used,cord connected refrigerated display cabinet.
Model(s)	SD60/150 C.C.
Voltage/Frequency	220-240V,50Hz
Rating current	11.18A
Drip tray Rating current	3A
Teststandard(s)orcriteria(s)	(EU)2019/2018 (EU)2019/2024 ENISO23953-2:2015
Conclusion	The results are incompliance with there requirements of the EC regulation 2019/2024. Energy efficiency class: E

Prepared by:He Jianjin

Photo 1 - Front view:

Name plate:

COMMERCIAL DISPLAY CABINET	
Model	SD60/150 C.C.
Voltage/Frequency	220-240/50Hz
Rating current	14.18A
Refrigerant	R452A-R448A-R404A (R290 Available)
Compressor	Tecumseh CAJ9510Z
Controller	LAE LF28DE
Vesicant	CO2

Name:FROST TECH
Address:Xiaowu Industrial Zone Dongchong Town,Nansha District,Guangzhou,Guangdong Province,P.R.China.

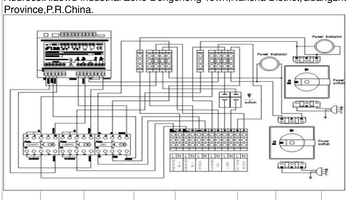

Product details:

Cabinet family code	VC2
Cabinet type	Integral
Model number of Unit Under Tested	SD60/150 C.C.
Brand name	FROST TECH
Operating temperature(s)	Chilled
Category	Vertical and combined supermarket refrigerator cabinets
Energy efficiency class	E
Climate class	3
M Package TemperatureClass	M2
Doors	N/A
Shelves	4 shelves
Light	LED strips
Refrigerant	R452A - R448A - R404A (R290 Available)
Charge of refrigerant(g)	950g
Over all dimensions(W*D*H)[mm]	1500*600*2000

Performance parameter:

Highest temperature of the warmest M-package of the compartment(s) with chilled operating temperatures (°C)	+7
Lowest temperature of the coldest M-package of the compartment(s) with chilled operating temperatures, or the highest minimum temperature of all M-packages of the compartment(s) with chilled operating temperatures (°C)	-1

Critical Components:

Name	Manufacturer/trademark	Type/model	Technical data
Compressor	TECUMSEH	CAJ9510Z	220-240V,50Hz
Controller	LAE	LF28DE	220-240V,50Hz

Test Condition:

Dry Bulb	25±1°C
Relativehumidity	60±3%
Input Voltage	230V
InputFrequency	50Hz

Temperature and total display area Tests:

Temperature Class	Symbol	TemperatureTest(°C)			Total display area test(m
		Temperature	Limit	Verdict	
M2	θah	6.4	≤7	Pass	2.7
	θb	0.5	≥-1	Pass	

Calculation for EEI and conclusion:

Total display area TDA(m	2.7
M	9.1
N	9.100
P	1.1
Y	2.7
C	1
Calculation formula	SAE:365*P*(M+N*Y)*C
Standard annual engery consumption SAE(Kwh/24h)	13518.5
Daily energy consumption Edaily (kWh/24h)	24
Annual energy consumption AE(kWh/a)	8761
Energy Efficiency Index EEI	64.8
Energy efficiency class	E
From 1 March 2021:EEI<100,Ice-cream freezer:EEI<90	Pass

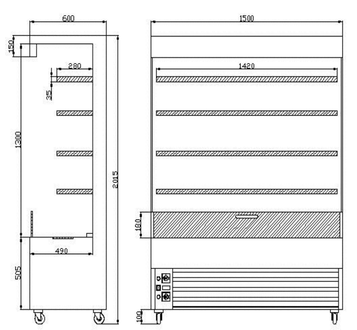

Type	Length	Depth	Height	Nom. voltage/ frequency	Electrical fusing	Temperature range
SD60/150 C.C.	1500 mm	600 mm	2015 mm	230 V/50 Hz	13A,slow	0 ...+7 °C